PO BOX 4394
SANTA ROSA, CA
95402 USA

P (707) 525-9941
F (707) 575-7046
EMGPICKUPS.COM

INSTALLATION INFORMATION
EMG MODELS: **ACTIVE / ACTIVE / TW (B161)**

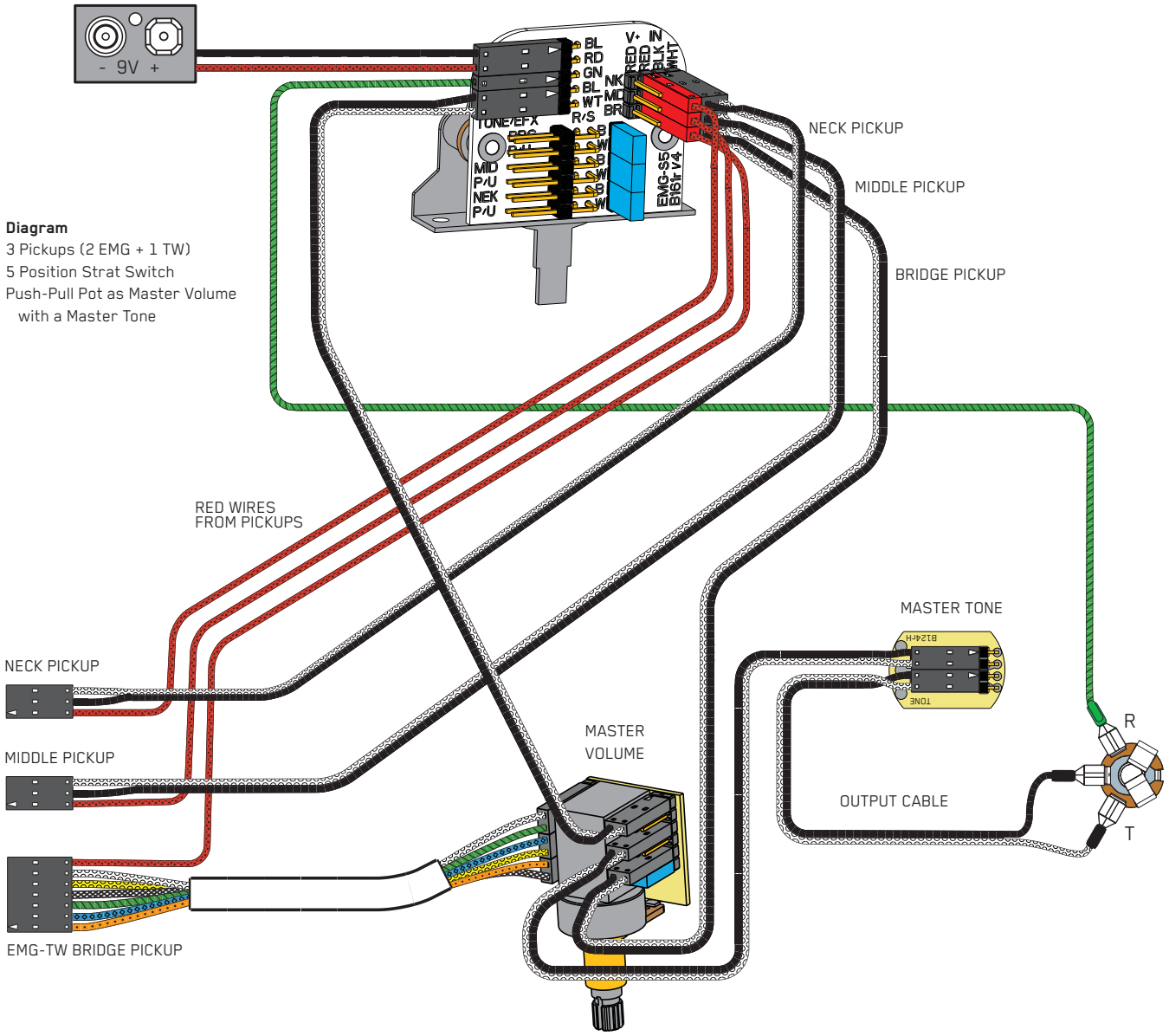

INSTALLATION NOTES:

All EMG Active Pickups are compatible with each other. EMG accessories, the VLPF, EXG, SPC or RPC Controls can be added to any EMG System without requiring an extra battery. DO NOT reconnect the bridge ground wire, as EMG Active Pickups do not require string grounding. Use the 25K Ohm controls that are included for best results. If your output jack is a long panel style you will need to solder a stereo jack, like the SwitchCraft 152B or similar. Adjust the pickup level to the strings, and experiment with a distance that works for you.
Alternate wiring diagrams are available at: emgpickups.com.

© 2020 Copyright EMG INC. All Rights Reserved.